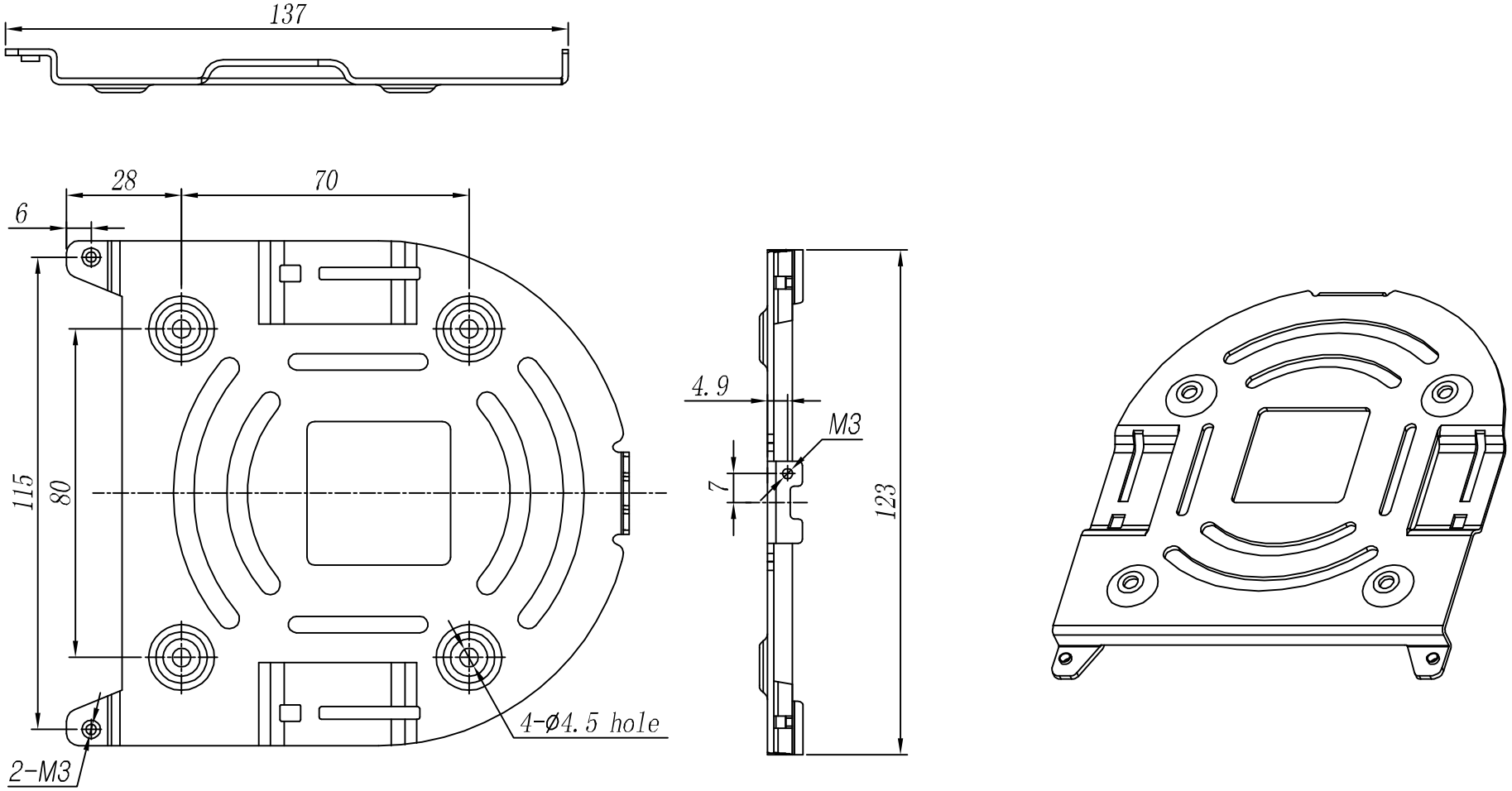
137
28
70
6
115
80
4-ø4.5 hole
2-M3
4.9
M3
7
123